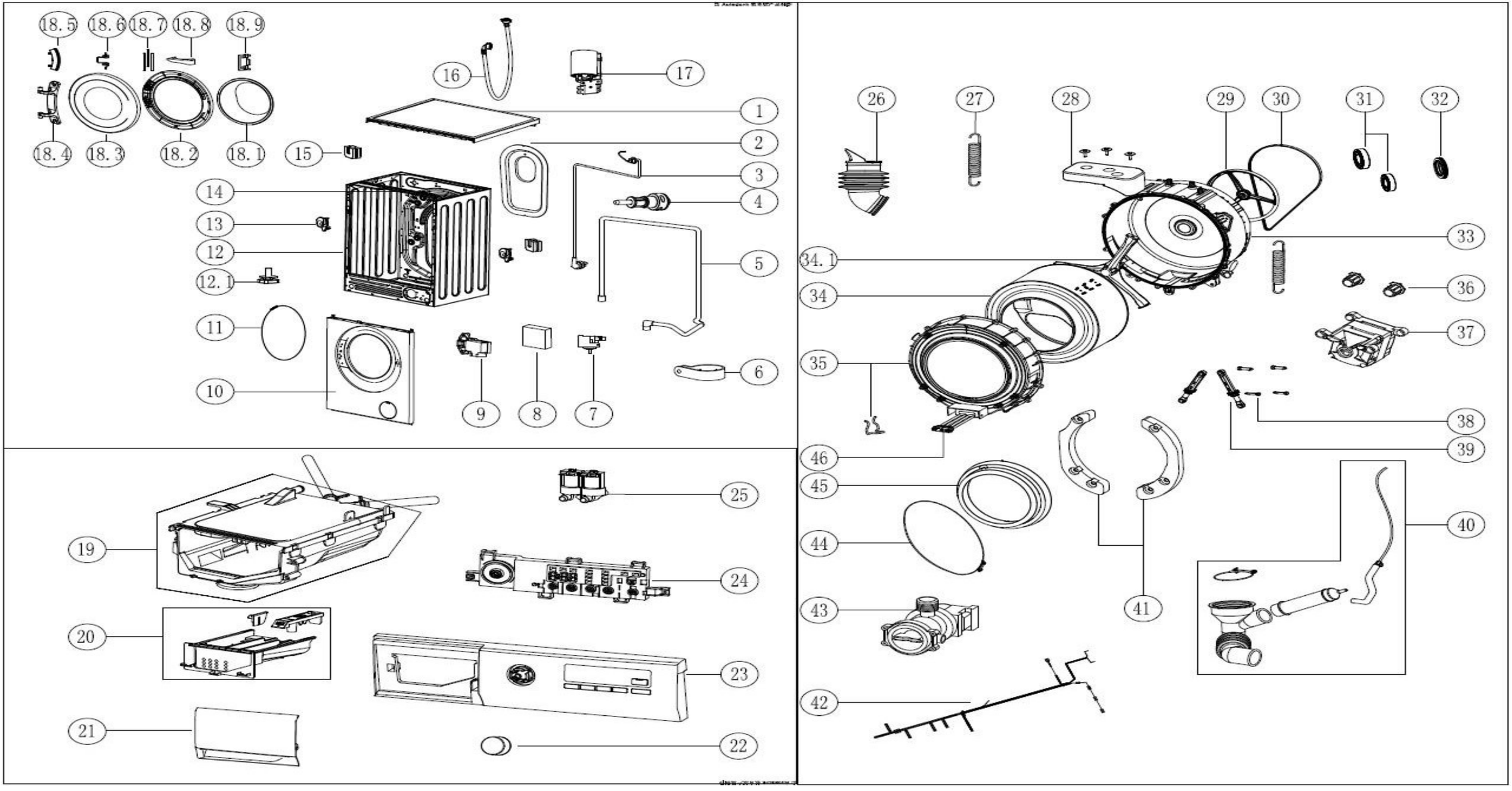
18.5
18.6
18.7
18.8
18.9
18.4
18.3
18.2
18.1
15
16
17
1
2
3
4
14
13
12
12.1
5
11
10
9
8
7
6
26
27
28
29
30
31
32
33
34.1
34
36
37
35
38
39
46
45
44
43
41
40
42
25
19
24
20
23
21
22